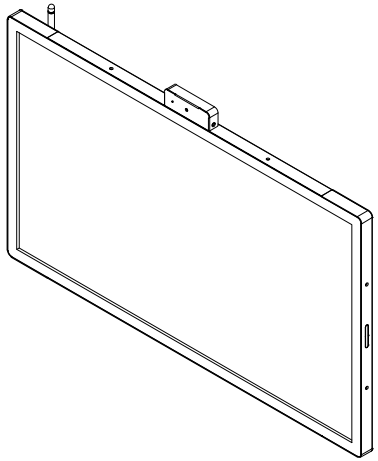

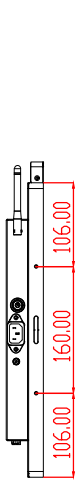
106.00
160.00
106.00

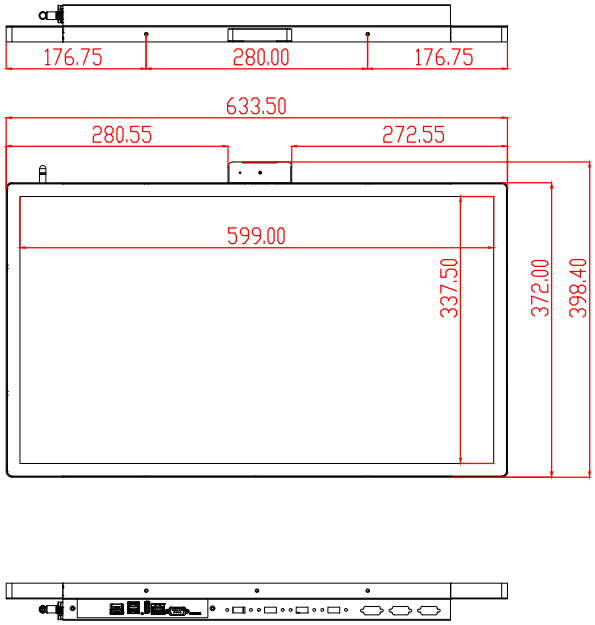
176.75
280.00
176.75
633.50
280.55
272.55
599.00
337.50
372.00
398.40

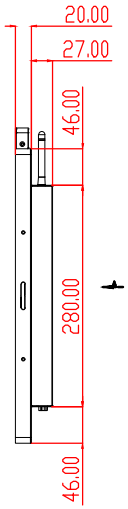
20.00
27.00
46.00
280.00
46.00

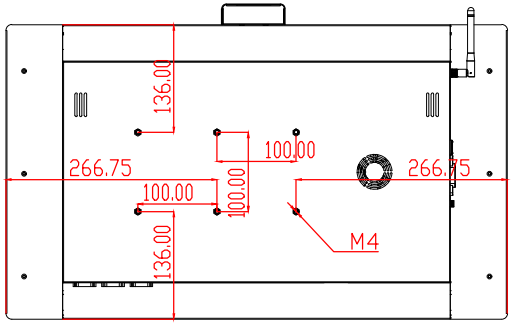
136.00
100.00
266.75
266.75
100.00
100.00
136.00
M4

| | | |