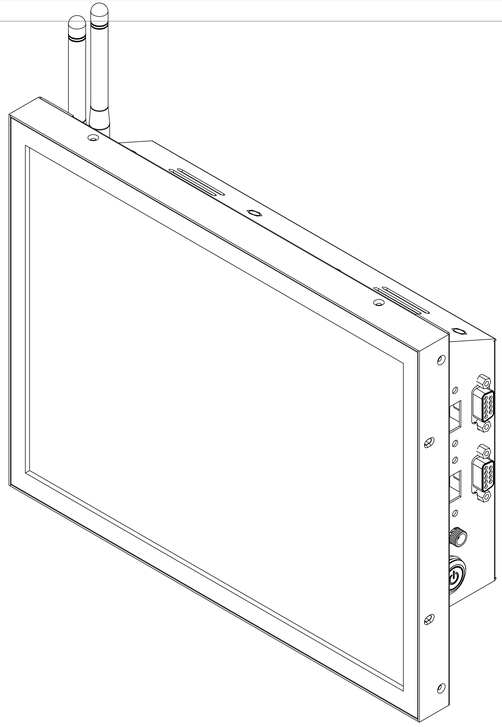

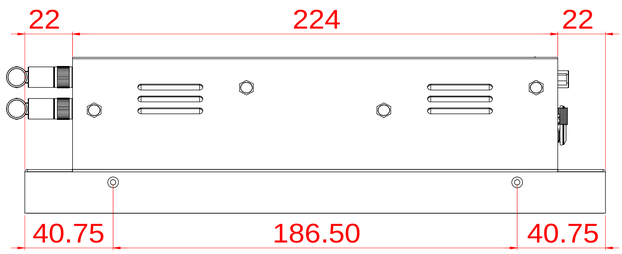


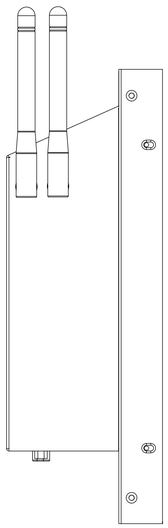

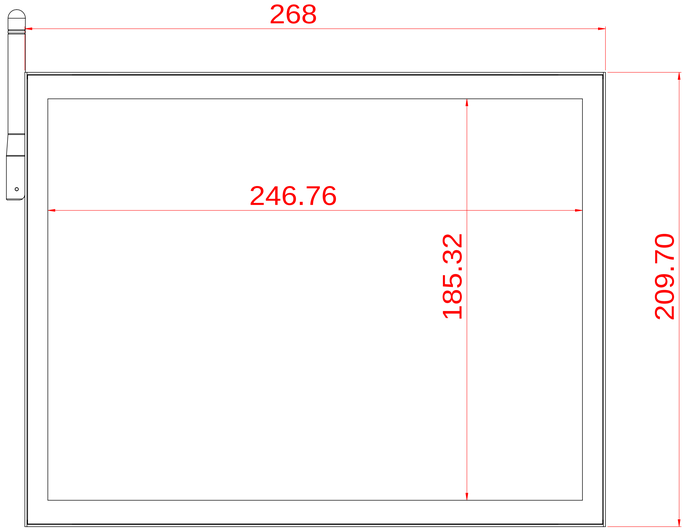


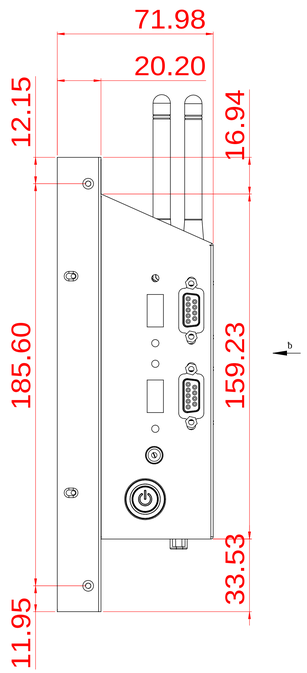


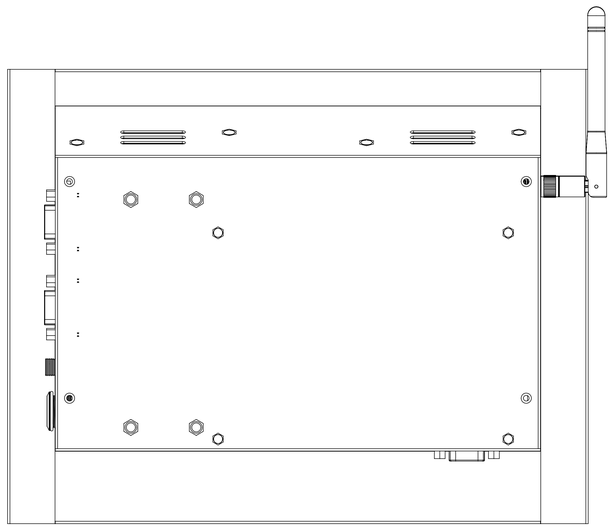

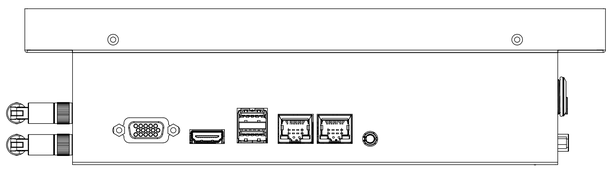

NTWP121V500E

A0