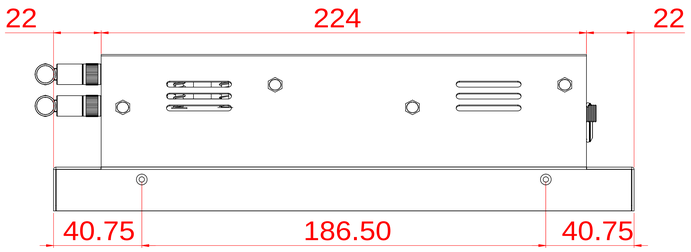
22
224
22
40.75
186.50
40.75

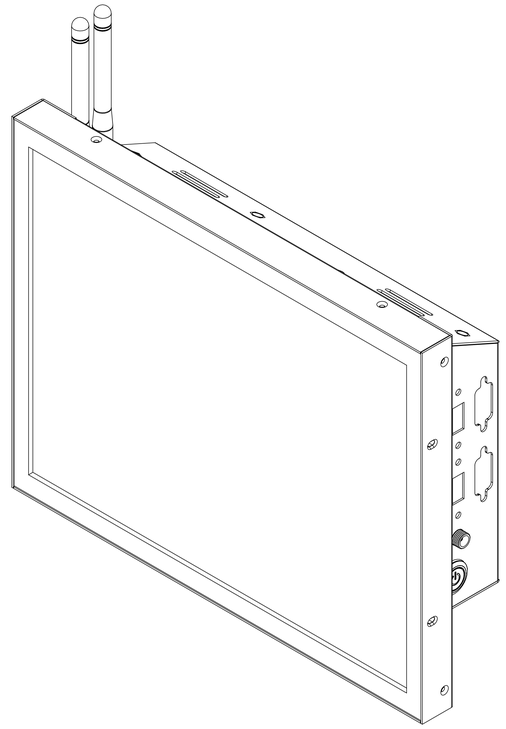

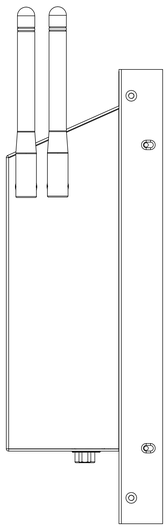

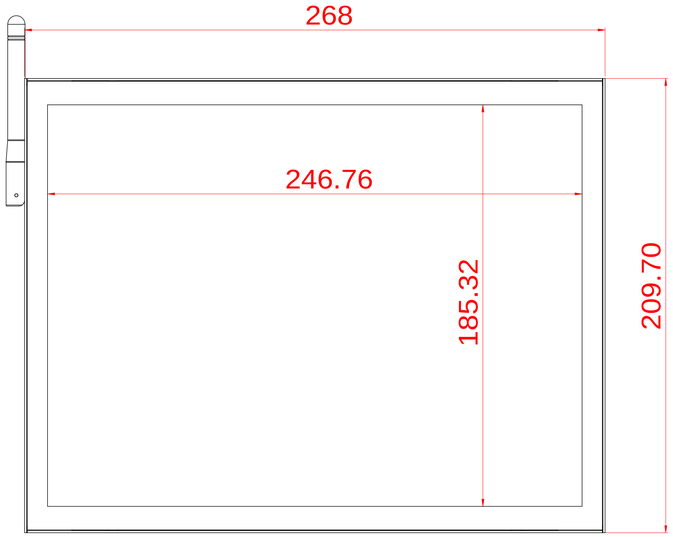
268
246.76
185.32
209.70

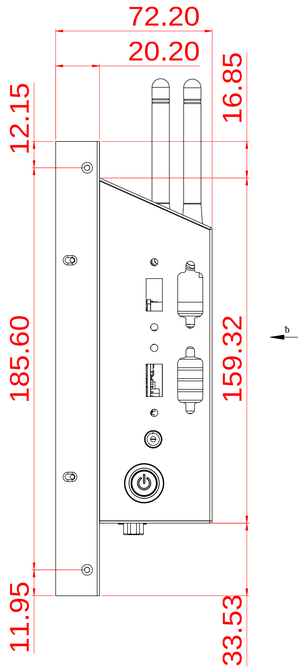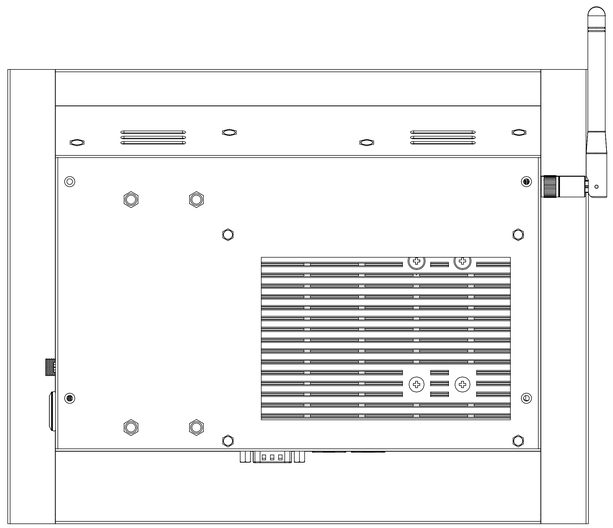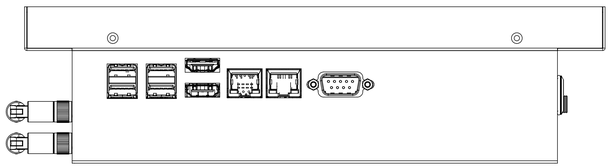
72.20
20.20
12.15
16.85
185.60
159.32
11.95
33.53