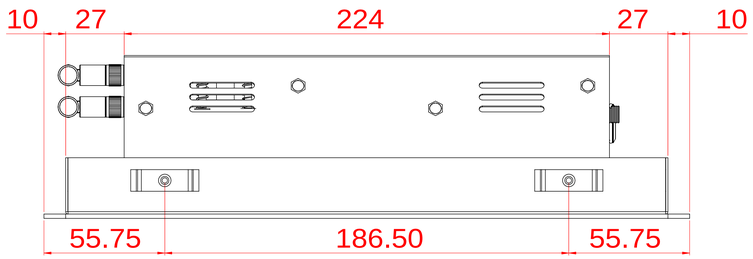


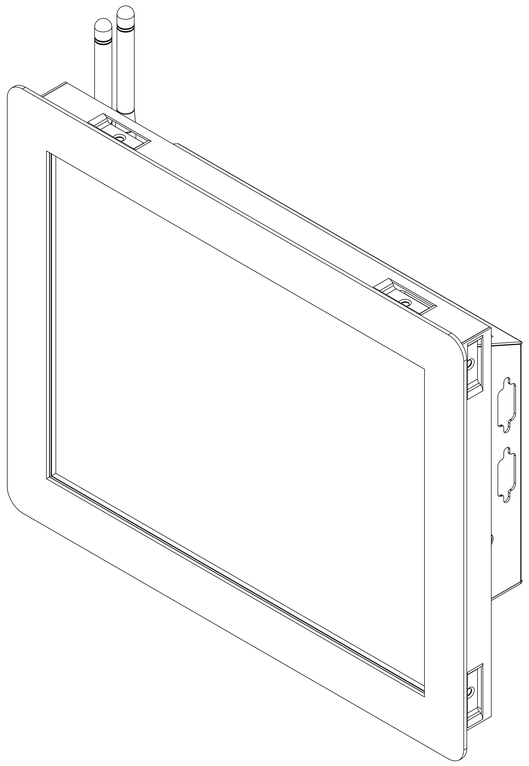

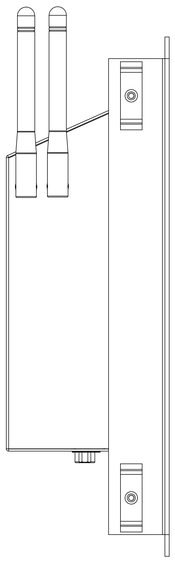

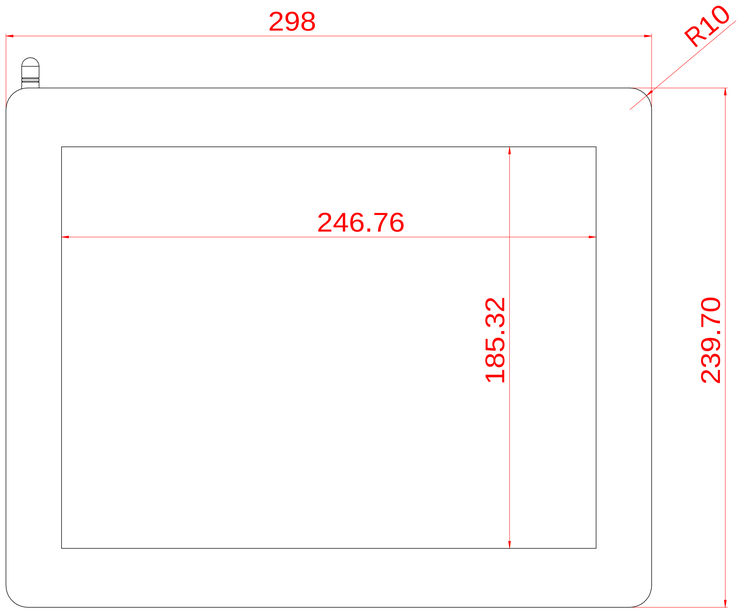


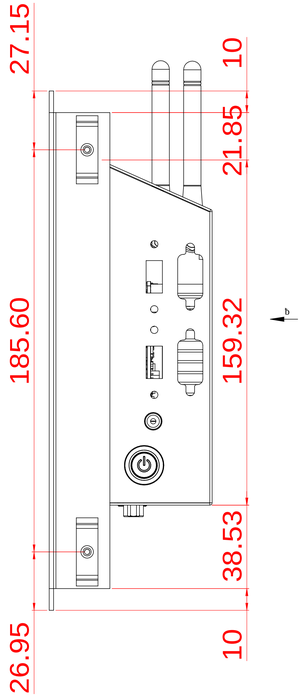


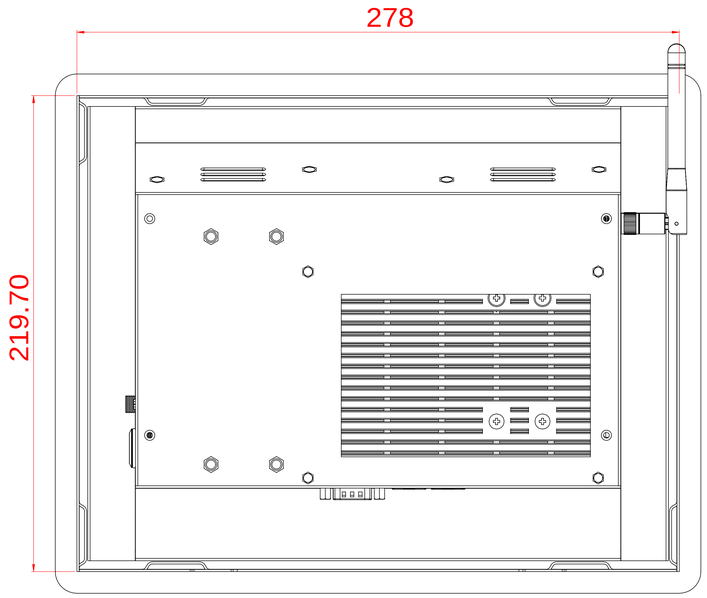


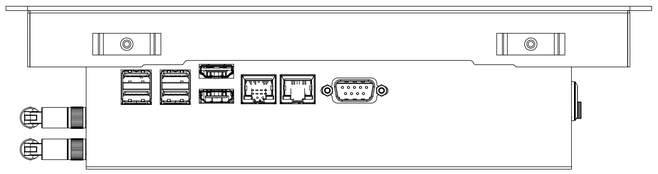

NTWP121V500

A0