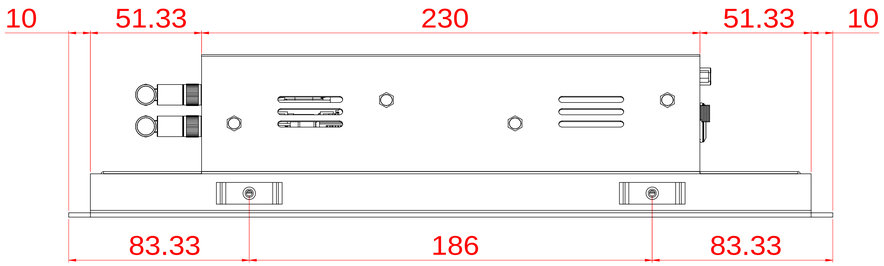
10
51.33
230
51.33
10
83.33
186
83.33

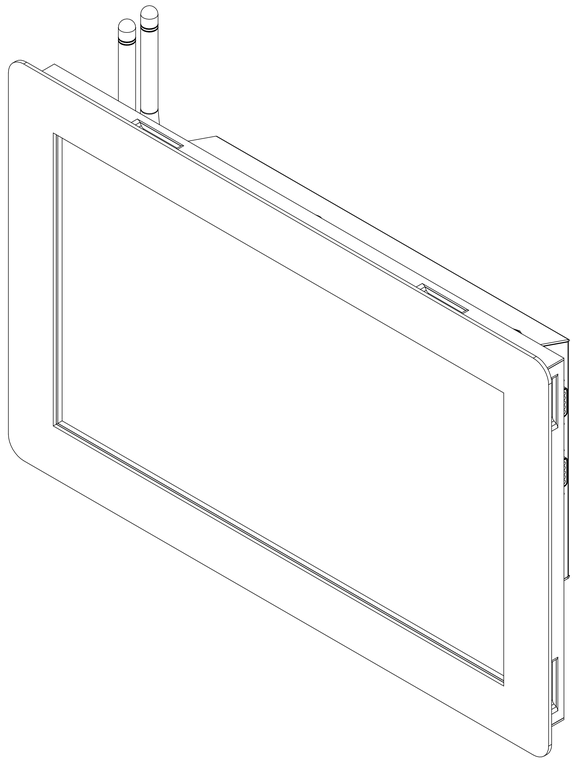

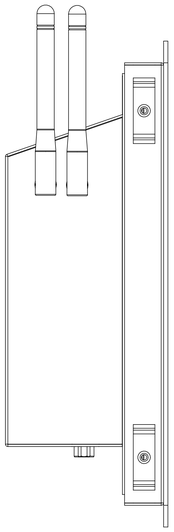

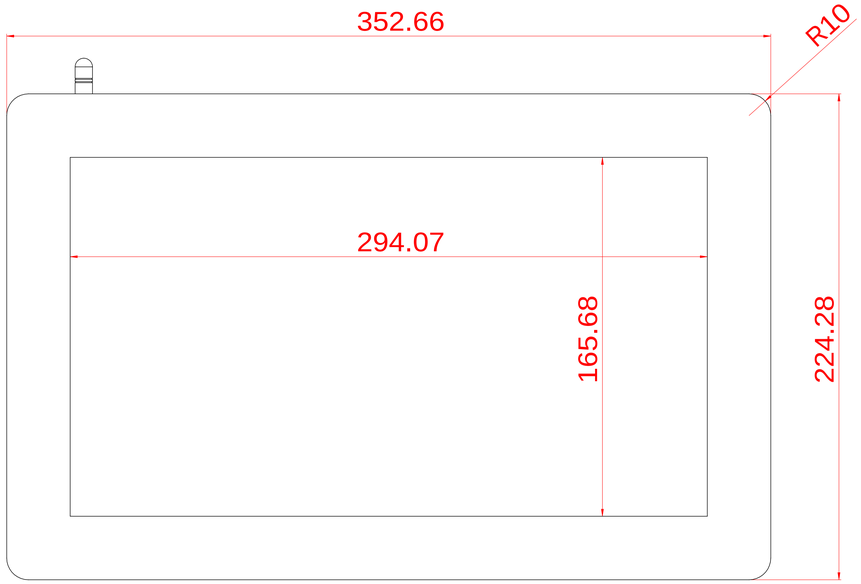
352.66
R10
294.07
165.68
224.28

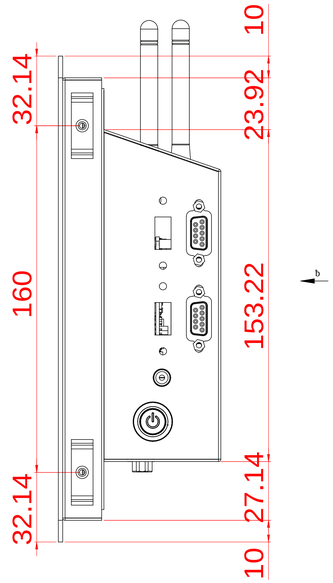
10
32.14
23.92
160
153.22
27.14
32.14
10

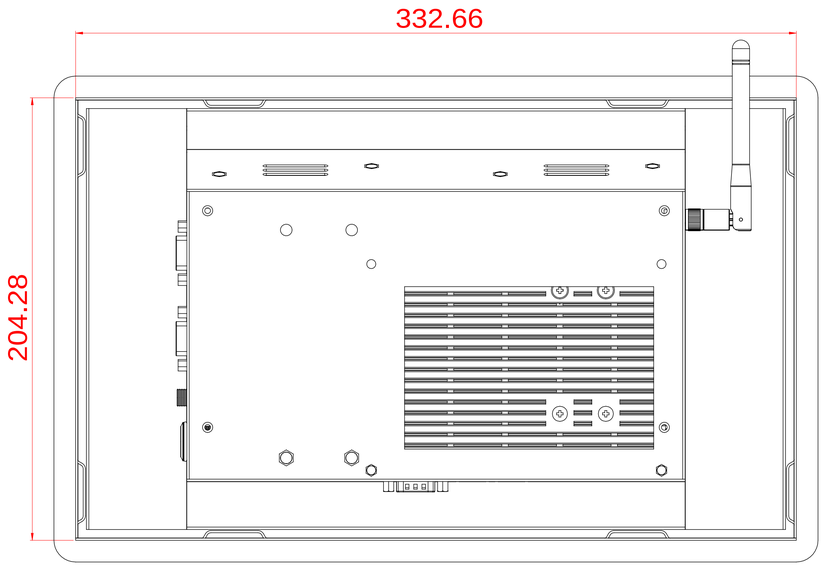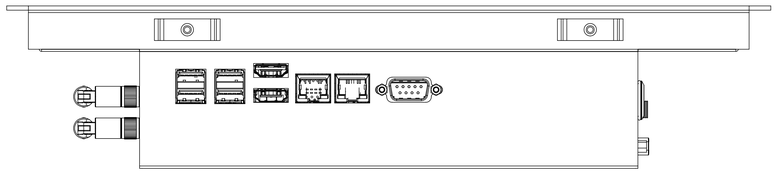
332.66
204.28