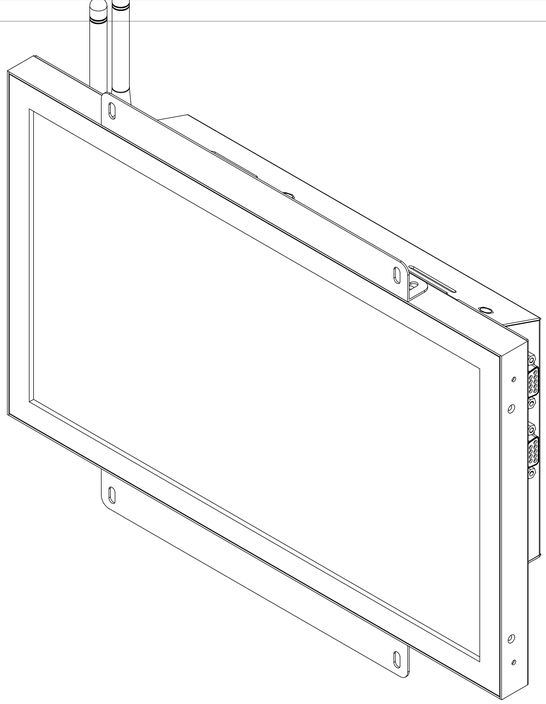

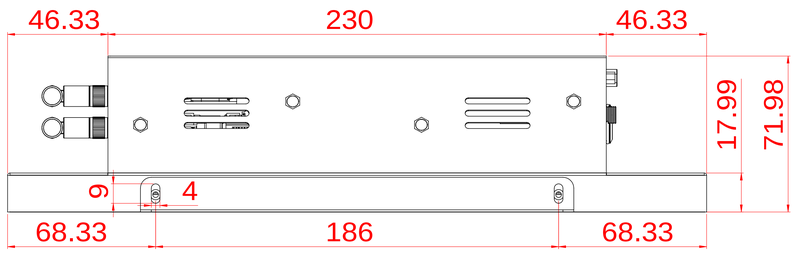
46.33
230
46.33
17.99
71.98
9
4
68.33
186
68.33

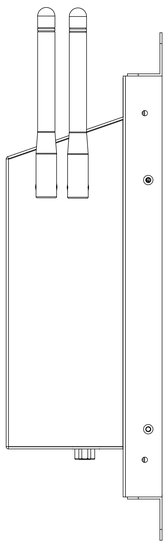

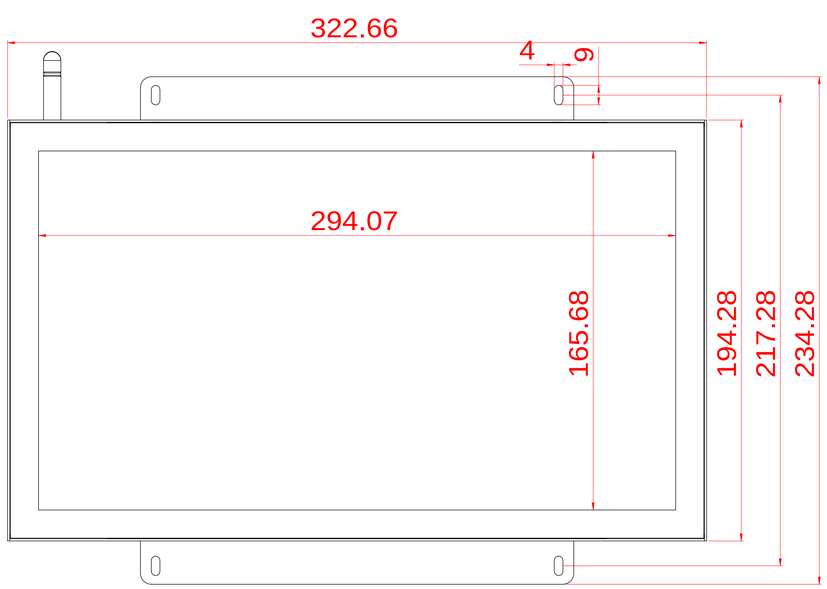
322.66
4
9
294.07
165.68
194.28
217.28
234.28

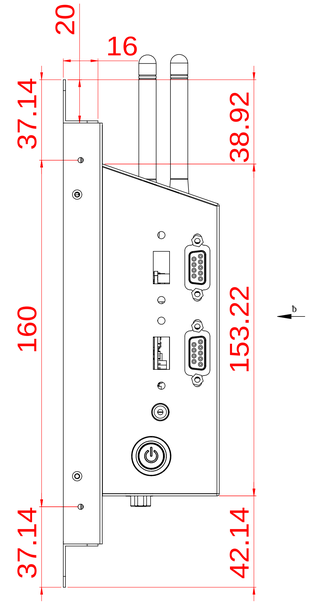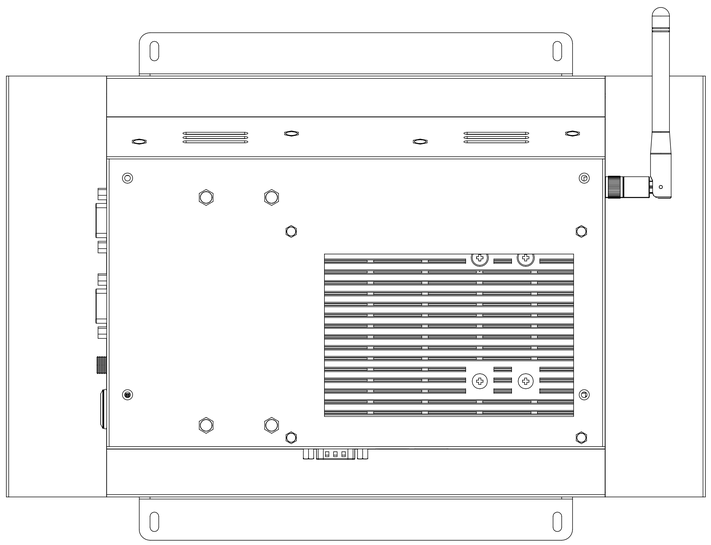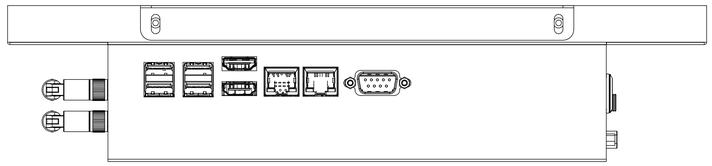
20
16
37.14
38.92
160
153.22
37.14
42.14