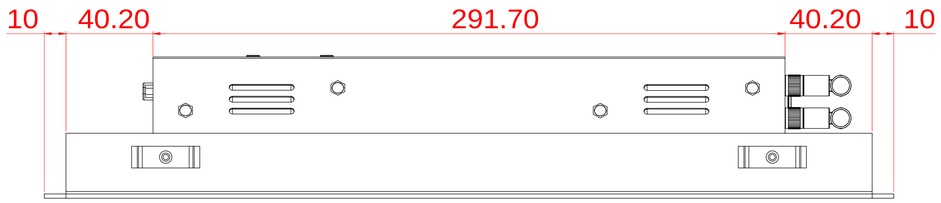
10
40.20
291.70
40.20
10

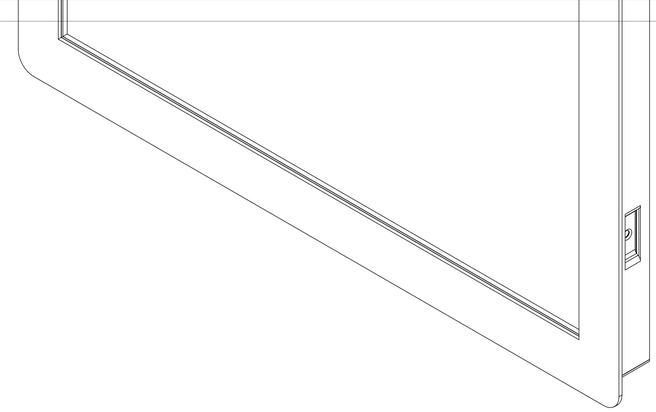

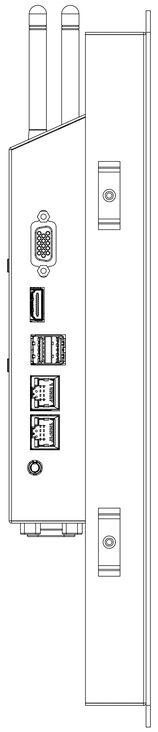

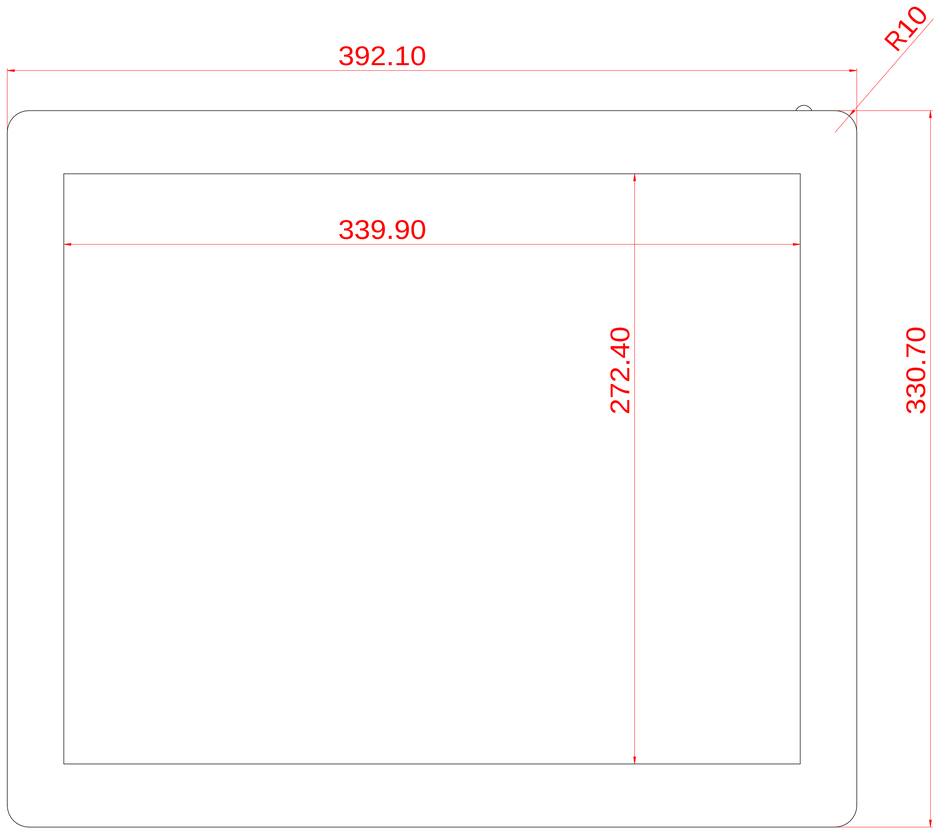
392.10
R10
339.90
272.40
330.70

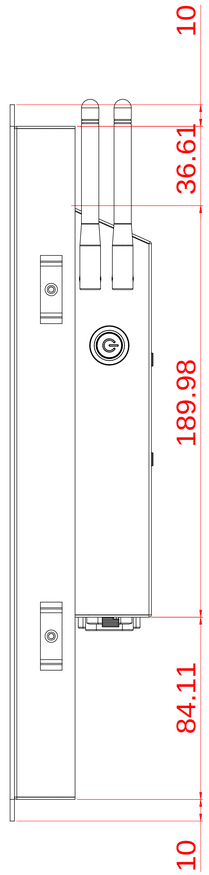
10
36.61
189.98
310.70
84.11
10

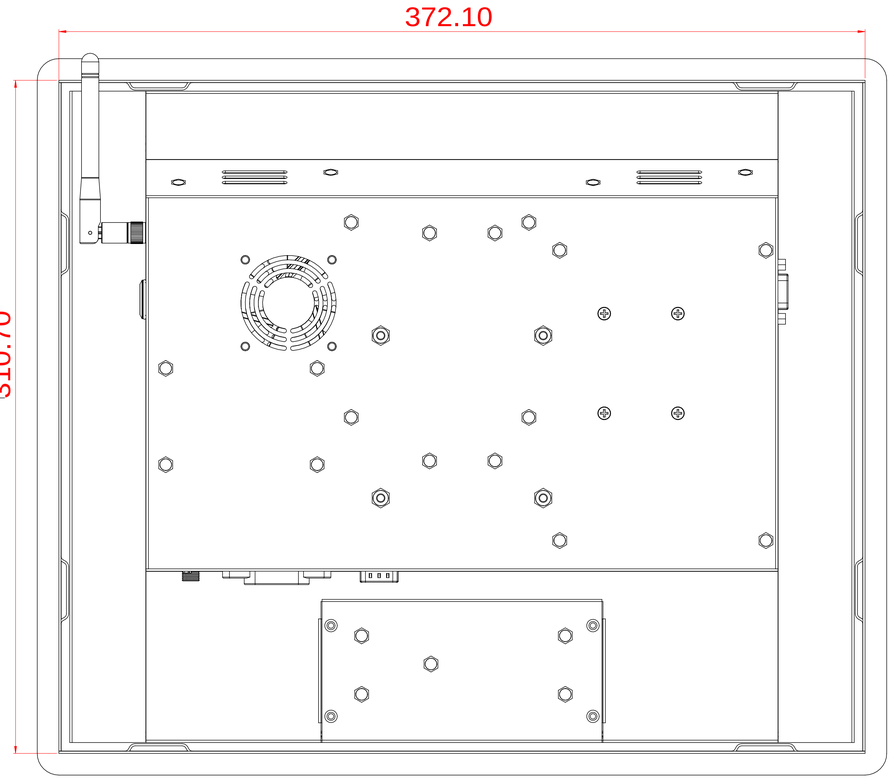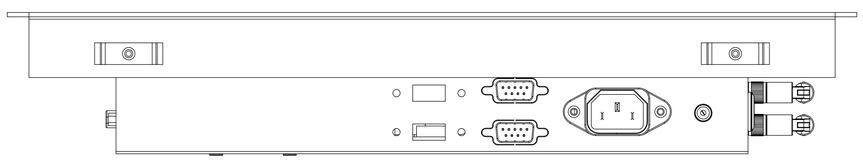
372.10