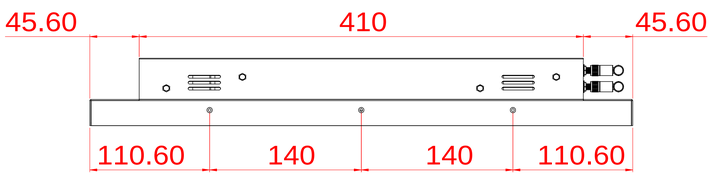
45.60
410
45.60
110.60
140
140
110.60

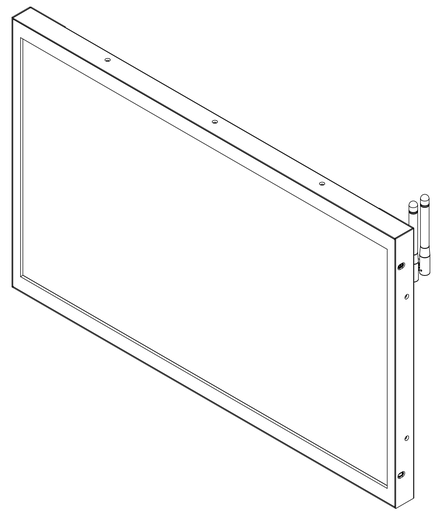

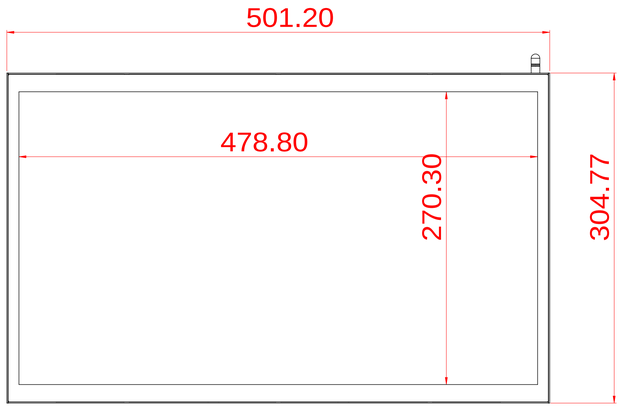
501.20
478.80
270.30
304.77

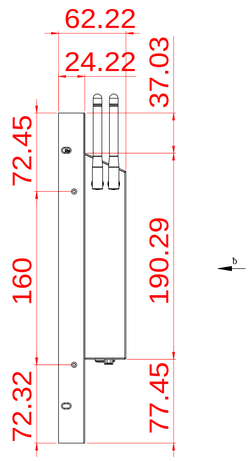
62.22
24.22
37.03
72.45
160
190.29
72.32
77.45

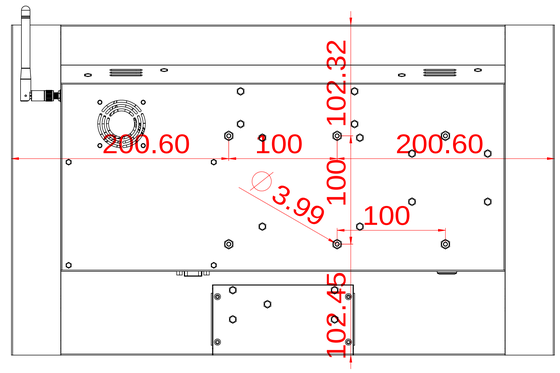
102.32
200.60
100
200.60
100
∅3.99
100
102.45

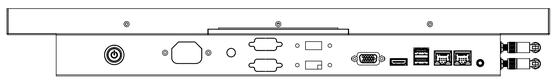

A0