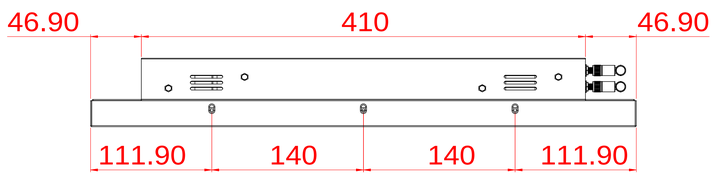
46.90
410
46.90
111.90
140
140
111.90

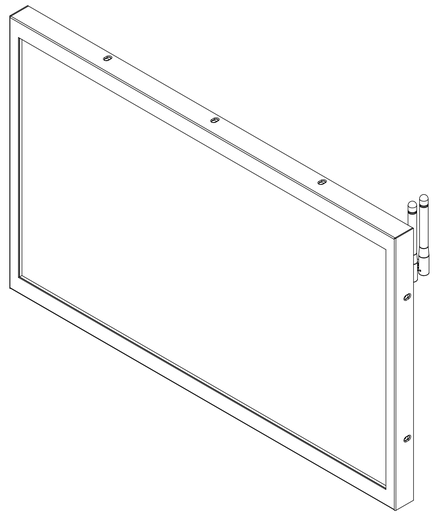

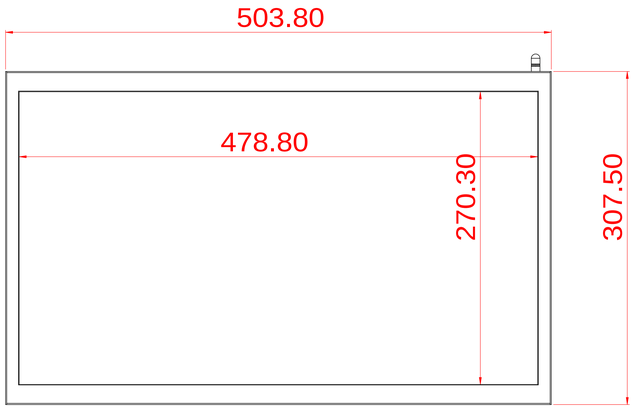
503.80
478.80
270.30
307.50

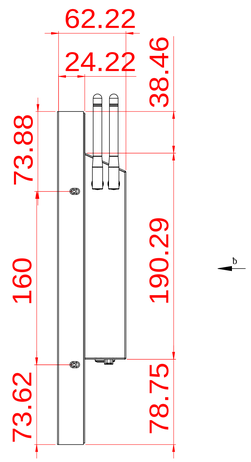
62.22
24.22
38.46
73.88
160
190.29
73.62
78.75

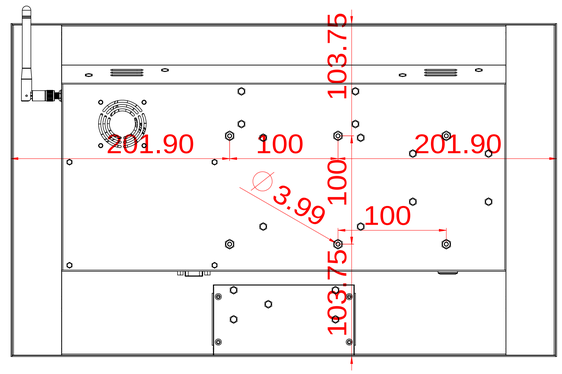
103.75
201.90
100
201.90
100
∅3.99
100
103.75

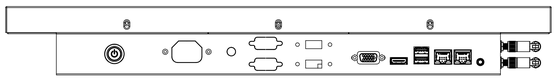

A0