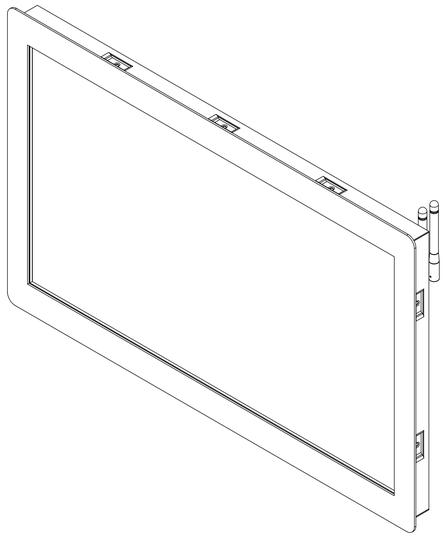

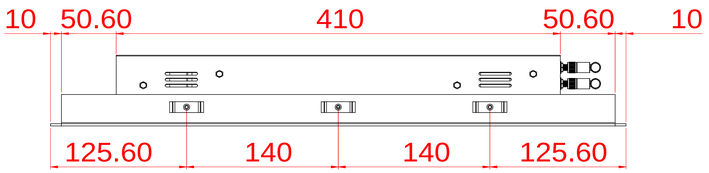
10
50.60
410
50.60
10
125.60
140
140
125.60

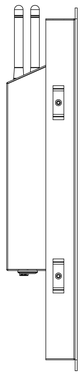

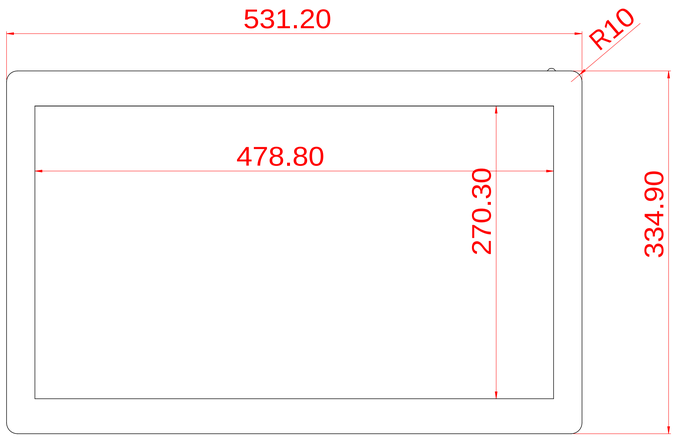
531.20
R10
478.80
270.30
334.90

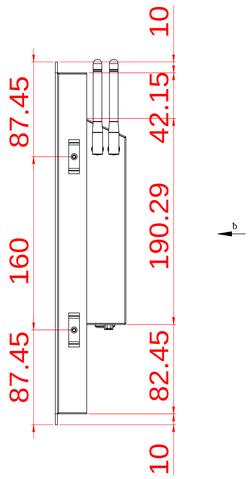
10
87.45
42.15
160
190.29
87.45
82.45
10

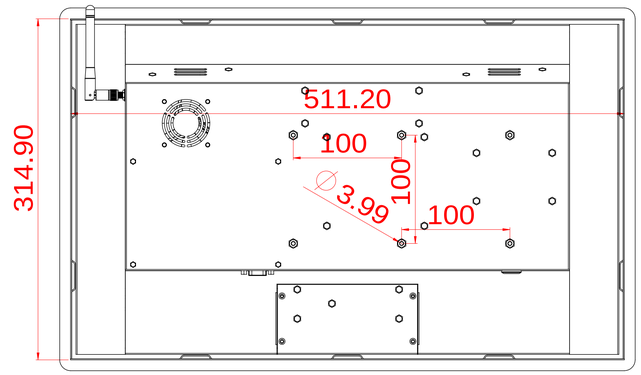
314.90
511.20
100
100
100
∅3.99

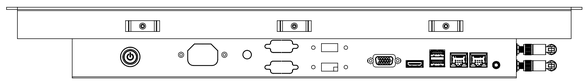

A0