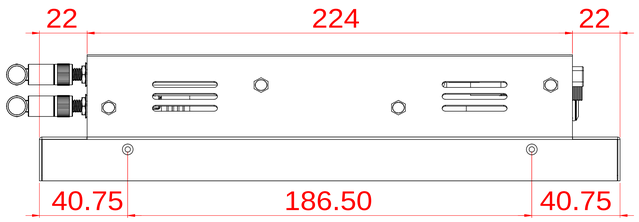
22
224
22
40.75
186.50
40.75

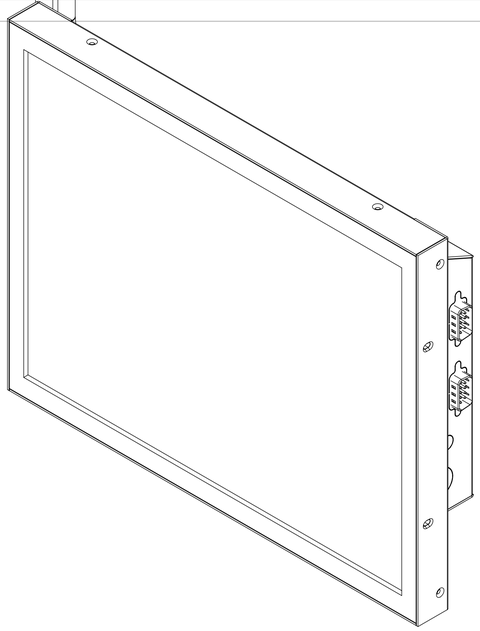

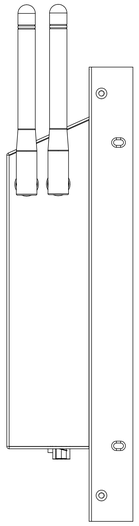

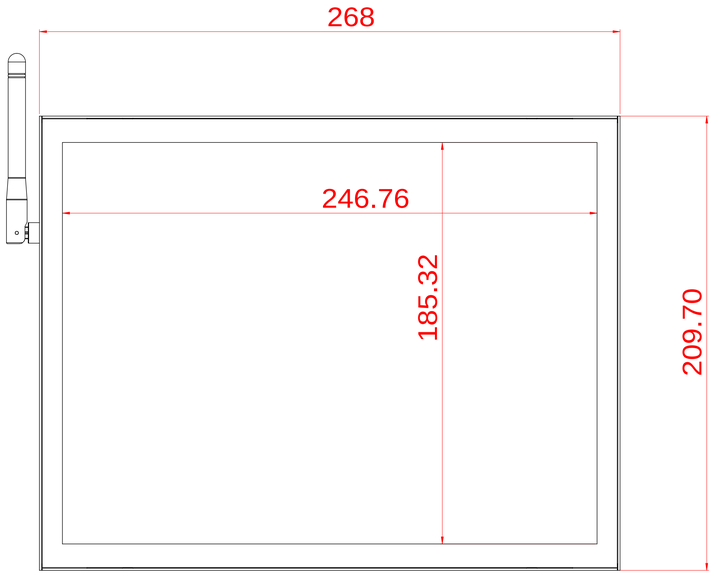
268
246.76
185.32
209.70

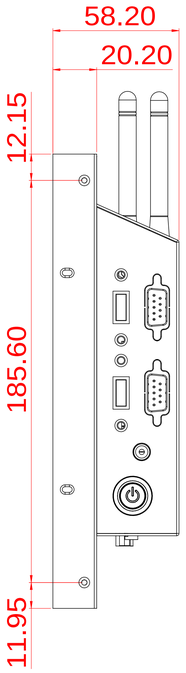
58.20
20.20
12.15
185.60
11.95

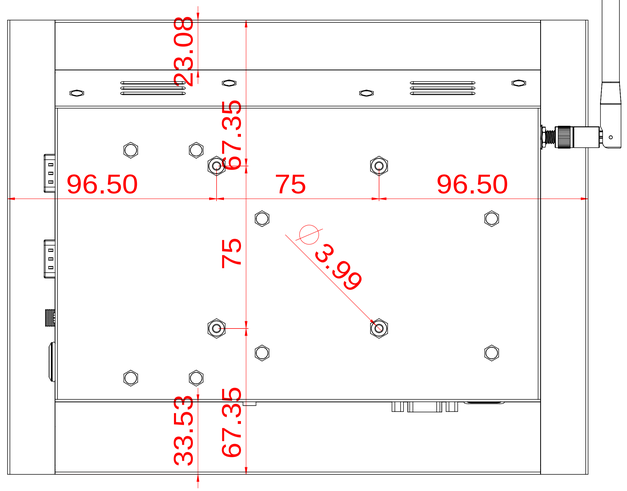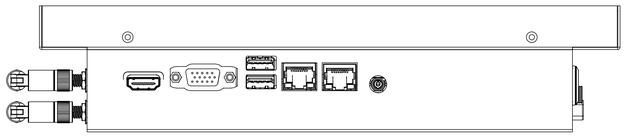
23.08
67.35
96.50
75
96.50
75
Ø3.99
33.53
67.35