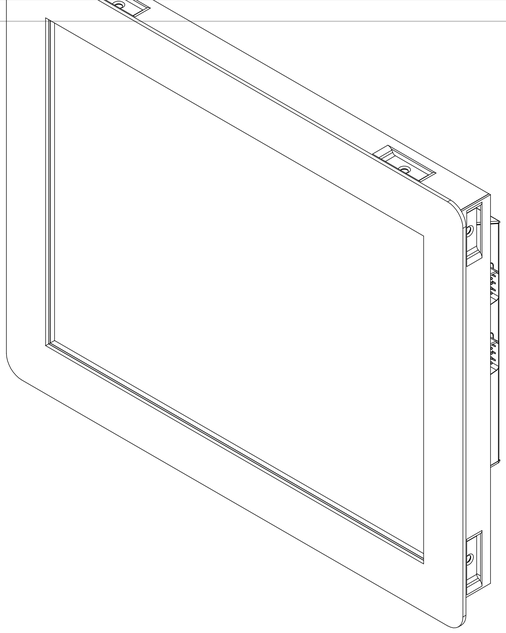

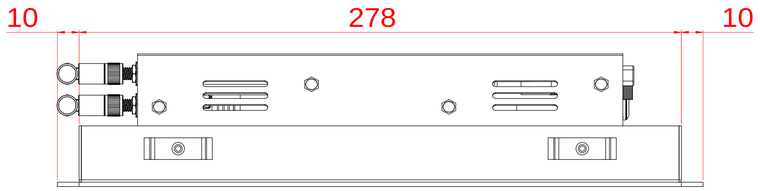
10
278
10

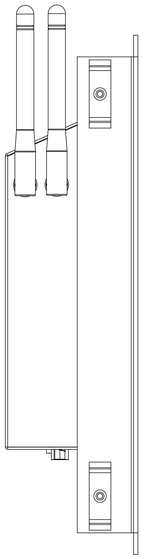

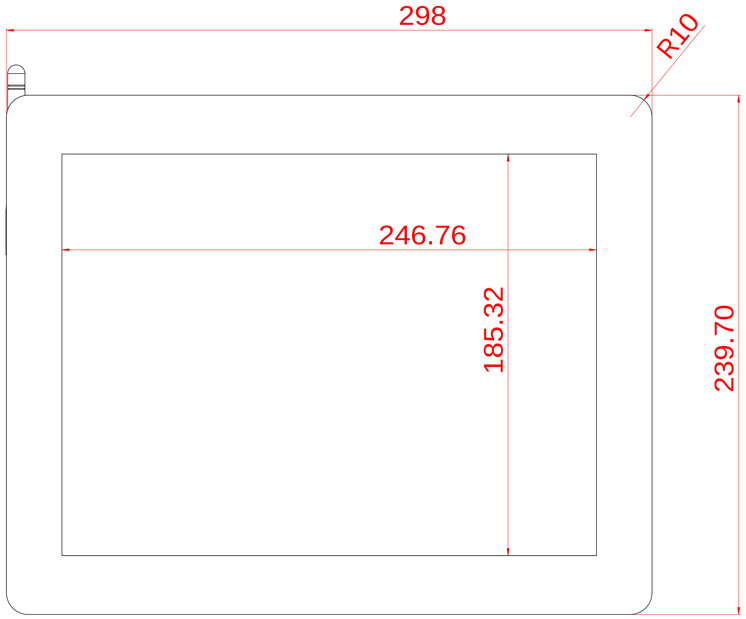
298
R10
246.76
185.32
239.70

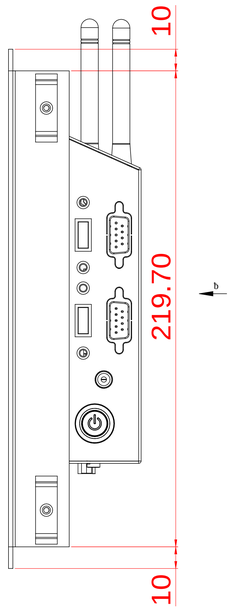
10
219.70
10

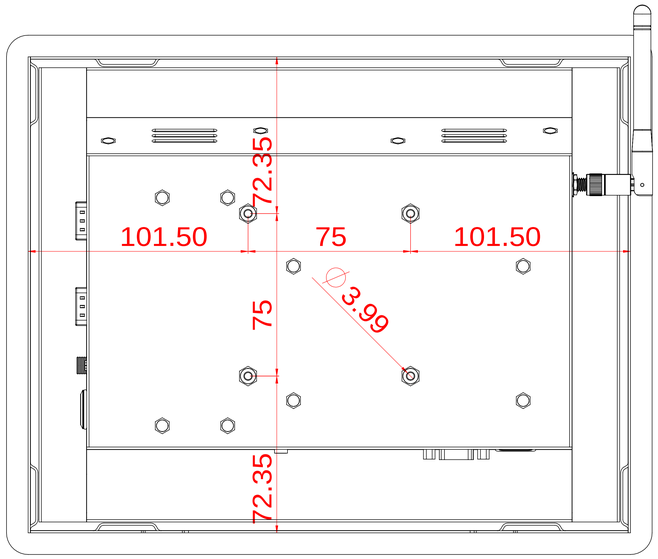
72.35
101.50
75
101.50
75
Ø3.99
72.35

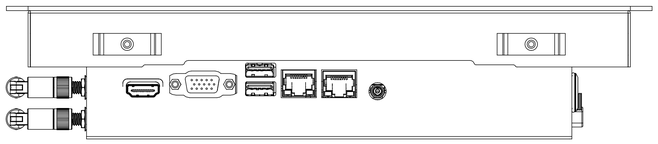

A0